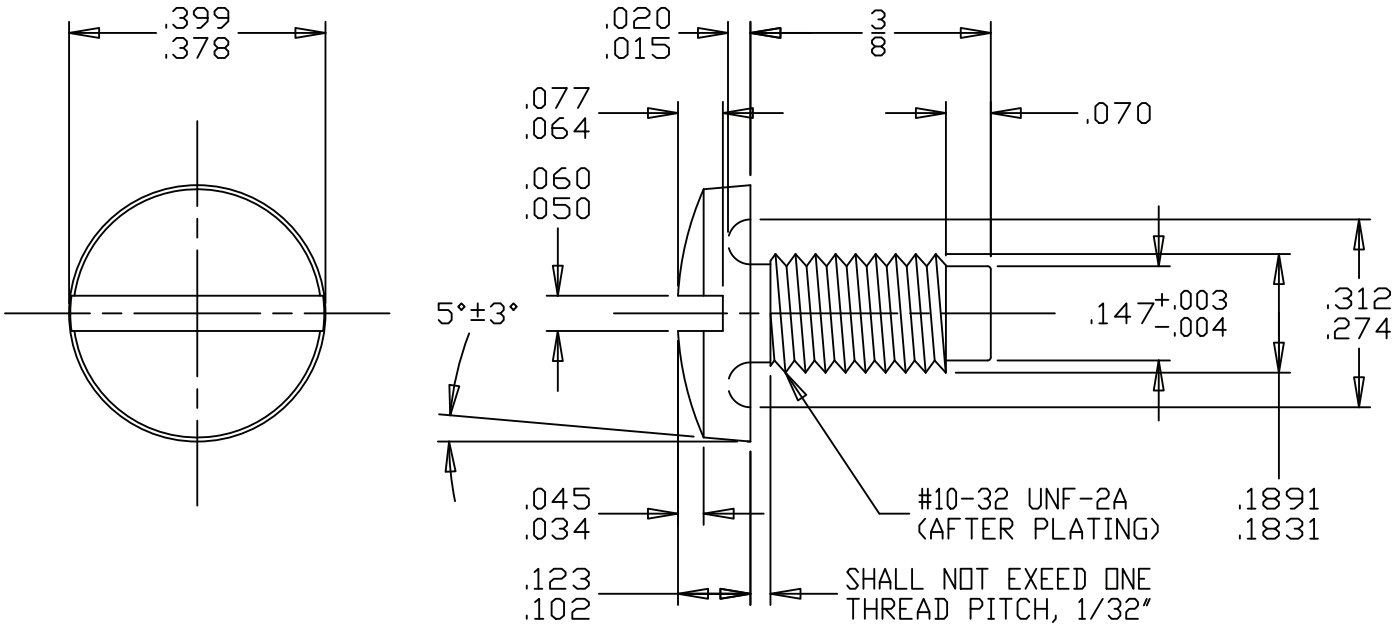

NOTES:

1. SCREW TO HAVE UNDERCUT HEAD
2. .0001 NICKEL (COPPER FLASH OPTIONAL)
3. MATERIAL - AISI C26000, C27000, OR JIS C2700
4. WAX FASTENER TO MSP SPEC. PED215
5. TORSIONAL STRENGTH TEST PER PEQ122.

REV.	ECR	CHANGE	BY	DATE
G	0098033	ADD ALT MAT'LS - C27000, JIS C2700 REMOVE PITCH DIA SPEC	IPS	01/15 16
F	135 05	FINISH WAS .0001 NICKEL OVER COPPER FLASH	JAB	09/28 05
E	046 05	FINISH WAS NICKEL PLATE (100 MICRO-INCH) ADDED WAX NOTE	JAB	03/18 05
D	179 02	CORRECTED .1891 WAS .1871	MSB	11 07 02
C	- -	REDRAWN ON CAD	AWW	3 27 95

UNLESS OTHERWISE SPECIFIED:
BREAK ALL SHARP EDGES
BURRS MUST NOT EXCEED .005
UNMARKED ANGLES ARE 90°
FLAT SURFACES FLAT WITHIN .005/IN.
ALL DIAMETERS TO BE STRAIGHT WITHIN ±.005 / IN
ANGLES ±1° FRACTIONS ±1/64
DECIMALS - 2 PLACE ±.010
3 PLACE ±.005

MARATHON SPECIAL PRODUCTS
BOWLING GREEN OHIO

MAT'L. SEE NOTE #3		FINISH SEE NOTE 2	
DRAWN AWW 3/27/95	CHECKED	APP.	LATEST CHANGE G
TITLE SCREW #10-32 X .375 SL BHM BR NI DOG POINT		PART NO. 9202101	